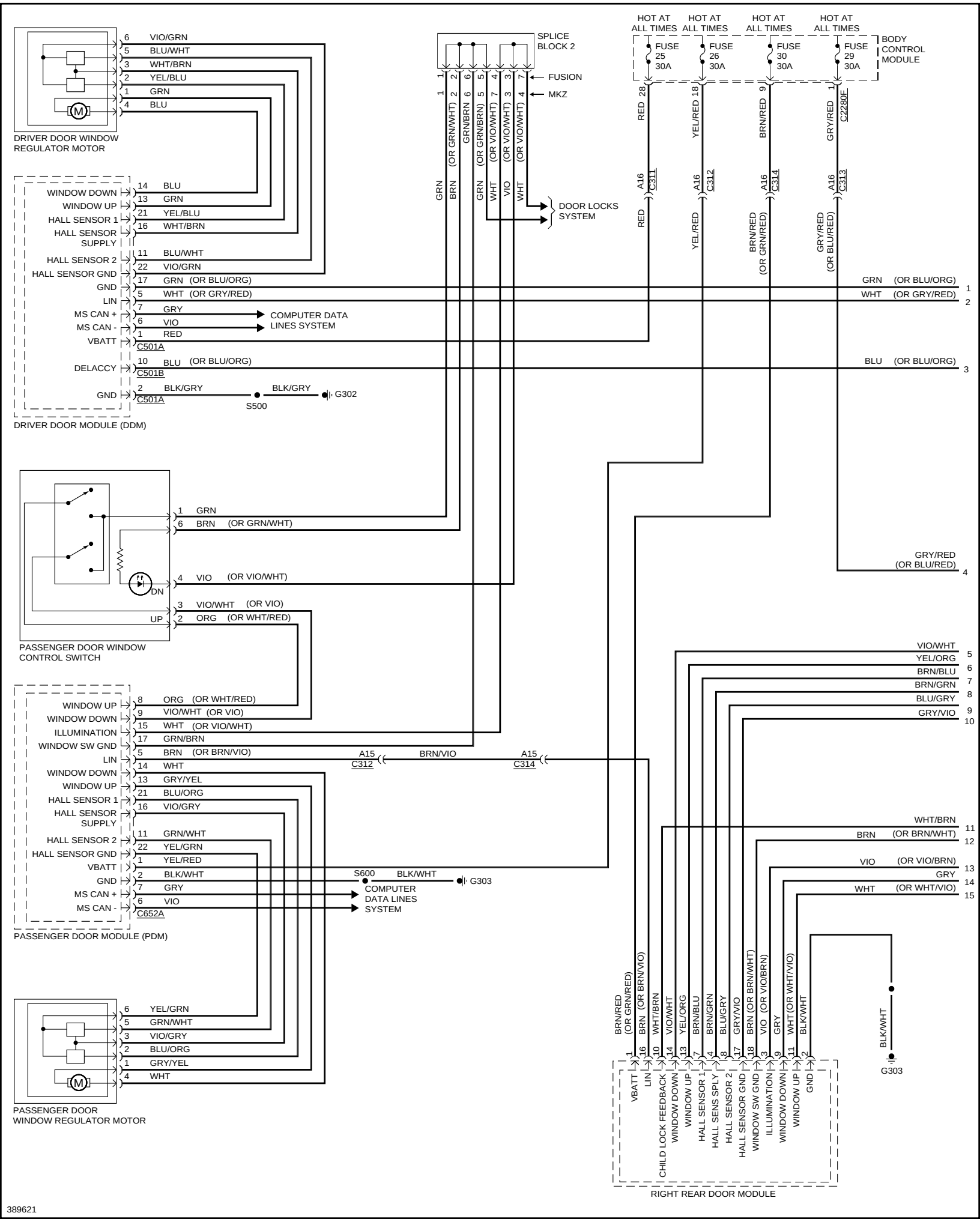
DRIVER DOOR WINDOW REGULATOR MOTOR
6 VIO/GRN
5 BLU/WHT
3 WHT/BRN
2 YEL/BLU
1 GRN
4 BLU
DRIVER DOOR MODULE (DDM)
WINDOW DOWN 14 BLU
WINDOW UP 13 GRN
HALL SENSOR 1 21 YEL/BLU
HALL SENSOR SUPPLY 16 WHT/BRN
HALL SENSOR 2 11 BLU/WHT
HALL SENSOR GND 22 VIO/GRN
GND 17 GRN (OR BLU/ORG)
LIN 5 WHT (OR GRY/RED)
MS CAN + 7 GRY
MS CAN - 6 VIO
VBATT 1 RED
C501A
COMPUTER DATA LINES SYSTEM
DELACCY 10 BLU (OR BLU/ORG)
C501B
GND 2 BLK/GRY
C501A
S500
BLK/GRY
G302
SPLICE BLOCK 2
FUSION
MKZ
GRN
BRN (OR GRN/WHT)
GRN/BRN
GRN (OR GRN/BRN)
WHT (OR VIO/WHT)
VIO (OR VIO/WHT)
WHT (OR VIO/WHT)
DOOR LOCKS SYSTEM
HOT AT ALL TIMES
FUSE 25 30A
FUSE 26 30A
FUSE 30 30A
FUSE 29 30A
BODY CONTROL MODULE
RED 28
YEL/RED 18
BRN/RED 9
GRY/RED 1
C2280F
A16 C311
A16 C312
A16 C314
A16 C313
RED
YEL/RED
BRN/RED (OR GRN/RED)
GRY/RED (OR BLU/RED)
GRN (OR BLU/ORG) 1
WHT (OR GRY/RED) 2
BLU (OR BLU/ORG) 3
GRY/RED (OR BLU/RED) 4
PASSENGER DOOR WINDOW CONTROL SWITCH
1 GRN
6 BRN (OR GRN/WHT)
DN
4 VIO (OR VIO/WHT)
UP
3 VIO/WHT (OR VIO)
2 ORG (OR WHT/RED)
PASSENGER DOOR MODULE (PDM)
WINDOW UP 8 ORG (OR WHT/RED)
WINDOW DOWN 9 VIO/WHT (OR VIO)
ILLUMINATION 15 WHT (OR VIO/WHT)
WINDOW SW GND 17 GRN/BRN
LIN 5 BRN (OR BRN/VIO)
WINDOW DOWN 14 WHT
WINDOW UP 13 GRY/YEL
HALL SENSOR 1 21 BLU/ORG
HALL SENSOR SUPPLY 16 VIO/GRY
HALL SENSOR 2 11 GRN/WHT
HALL SENSOR GND 22 YEL/GRN
VBATT 1 YEL/RED
GND 2 BLK/WHT
MS CAN + 7 GRY
MS CAN - 6 VIO
C652A
A15 C312
BRN/VIO
A15 C314
S600
BLK/WHT
G303
COMPUTER DATA LINES SYSTEM
PASSENGER DOOR WINDOW REGULATOR MOTOR
6 YEL/GRN
5 GRN/WHT
3 VIO/GRY
2 BLU/ORG
1 GRY/YEL
4 WHT
VIO/WHT 5
YEL/ORG 6
BRN/BLU 7
BRN/GRN 8
BLU/GRY 9
GRY/VIO 10
WHT/BRN 11
BRN (OR BRN/WHT) 12
VIO (OR VIO/BRN) 13
GRY 14
WHT (OR WHT/VIO) 15
BLK/WHT
G303
BRN/RED (OR GRN/RED) 1
BRN (OR BRN/VIO) 16
WHT/BRN 10
VIO/WHT 14
YEL/ORG 13
BRN/BLU 7
BRN/GRN 4
BLU/GRY 8
GRY/VIO 17
BRN (OR BRN/WHT) 18
VIO (OR VIO/BRN) 3
GRY 9
WHT (OR WHT/VIO) 11
BLK/WHT 2
VBATT
LIN
CHILD LOCK FEEDBACK
WINDOW DOWN
WINDOW UP
HALL SENSOR 1
HALL SENS SPLY
HALL SENSOR 2
HALL SENSOR GND
WINDOW SW GND
ILLUMINATION
WINDOW DOWN
WINDOW UP
GND
RIGHT REAR DOOR MODULE
389621